Product datasheet

Specifications

Green Premium™

SELECTOR SWITCH OPERATOR 30MM T-K

9001KS53K5

Discontinued on: 01-Nov-2020

Discontinued

Main

Range Of Product	Harmony 9001K
Product Or Component Type	Head for key selector switch
Device Short Name	9001K
Type Of Operator	To centre spring return
Operator Profile	key switch

Complementary

Bezel Material	Metal
Mounting Diameter	30 mm
Net Weight	0.234 kg
Shape Of Signaling Unit Head	Octagonal
Operator Position Information	3 positions
Type Of Keylock	E10
Key Number	E10
Key Withdrawal Position	Center
Contacts Type And Composition	Without contact block
Mechanical Durability	500000 cycles
Product Compatibility	9001KA1, mounted side 1 or 2
Device Presentation	Basic element
Operator Profile	Key switch
Type Of Operator	Spring return
Size	30 mm
Return	Both sides to centre
Cam Profile	3

Environment

Protective Treatment	TC
Ambient Air Temperature For Storage	-40…70 °C
Ambient Air Temperature For Operation	-25…70 °C
Overvoltage Category	Class II conforming to IEC 61140

Disclaimer: This documentation is not intended as a substitute for and is not to be used for determining suitability or reliability of these products for specific user applications

Ip Degree Of Protection	IP66 conforming to IEC 60529
Nema Degree Of Protection	NEMA 1 NEMA 12 NEMA 13 NEMA 2 NEMA 3 NEMA 3R NEMA 4
Standards	IEC 60947-1 CSA C22.2 No 14 UL 508 JIS C 4520 JIS C 852 IEC 60947-5-1 IEC 60947-5-4
Product Certifications	UL 508 NEMA
Vibration Resistance	7 gn (f= 2…500 Hz) conforming to IEC 60068-2-6
Shock Resistance	50 gn conforming to IEC 60068-2-27

Packing Units

Unit Type Of Package 1	PCE
Number Of Units In Package 1	1
Package 1 Height	5.588 cm
Package 1 Width	4.826 cm
Package 1 Length	9.398 cm
Package 1 Weight	185.973 g

Contractual warranty

Warranty	18 months

Sustainability

Green Premium™ label is Schneider Electric's commitment to delivering products with best-in-class environmental performance. Green Premium promises compliance with the latest regulations, transparency on environmental impacts, as well as circular and low-CO_2 products.

Guide to assessing product sustainability is a white paper that clarifies global eco-label standards and how to interpret environmental declarations.

Learn more about Green Premium >

Guide to assess a product's sustainability >

Transparency RoHS/REACh

Well-being performance

Mercury Free

Rohs Exemption Information	Yes

Certifications & Standards

Reach Regulation	REACh Declaration
Eu Rohs Directive	Pro-active compliance (Product out of EU RoHS legal scope)
China Rohs Regulation	China RoHS declaration
Environmental Disclosure	Product Environmental Profile
Weee	The product must be disposed on European Union markets following specific waste collection and never end up in rubbish bins
Circularity Profile	No need of specific recycling operations

Dimensions Drawings

Dimensions

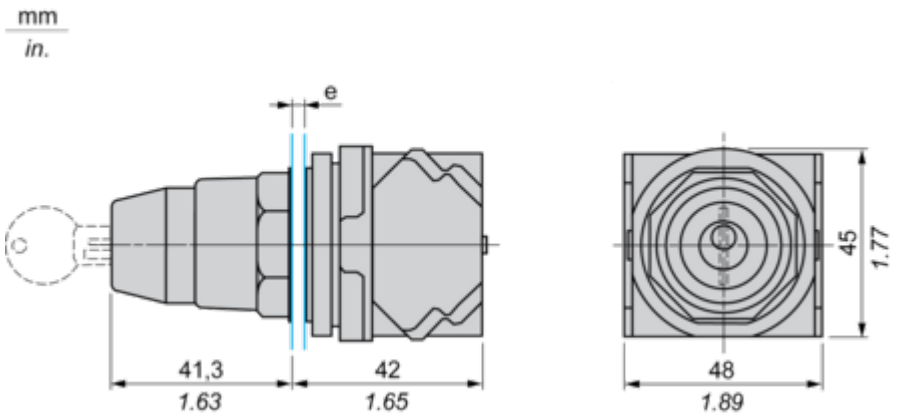

e panel thickness: 1 to 6 mm / 0.04 to 0.24 in.

Mounting and Clearance

Contact Block Mounting Position

Top and Rear views

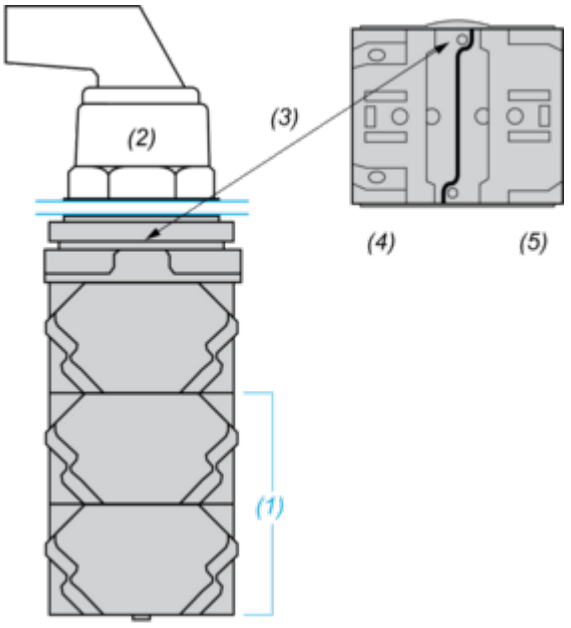

(1) It is possible to mount up to 3 levels of contacts blocks (maximum of 6 contacts blocks)
(2) Operator
(3) Locating notch
(4) Side 1
(5) Side 2

Panel Cut-Out

Clearance

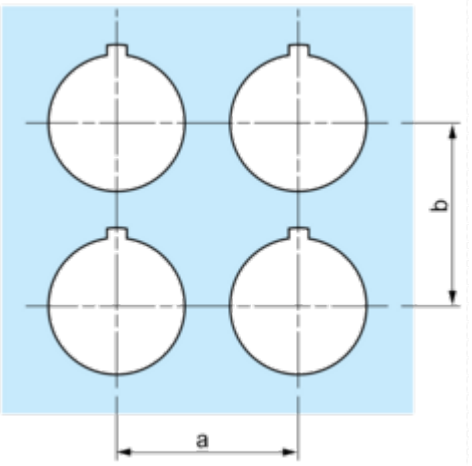

Legend plate	a min.		b min.	
	mm	in.	mm	in.
9001KN2••	57.2	2.25	44.5	1.75
9001KN3••	57.2	2.25	50.8	2.00

Individual Cut-outs Details
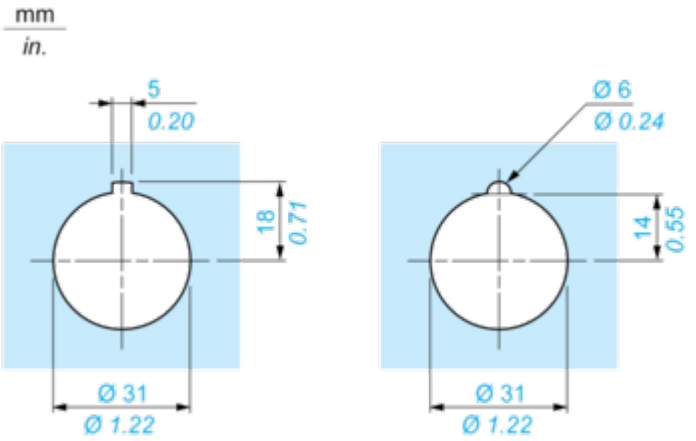
2 alternatives