Product datasheet

Specifications

Green Premium™

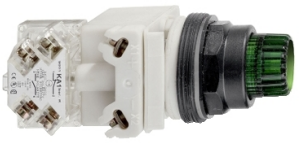

Illuminated push-button, Harmony 9001SK, plastic, projecting, green, 30mm, spring return, 24-28V, 1 C/O

9001SK2L35GH13

Main

Range Of Product	Harmony 9001SK
Product Or Component Type	Illuminated push-button
Device Short Name	9001SK
Type Of Operator	spring return
Operator Profile	Green projecting, unmarked
Operator Additional Information	Without guard
Light Block Supply	Direct 24 V AC/DC

Complementary

Bezel Material	Plastic
Mounting Diameter	30 mm
Shape Of Signaling Unit Head	Octagonal
Light Source	incandescent
Bulb Base	BA 9s
[Us] Rated Supply Voltage	24...28 V AC/DC
Contacts Type And Composition	1 C/O
Connections - Terminals	Screw clamp terminals 1 x 0.22...2 x 1.5 mm² conforming to EN/IEC 60947-1
Tightening Torque	0.8 N.m conforming to EN/IEC 60947-1
Shape Of Screw Head	Cross slotted
Mechanical Durability	5000000 cycles
Operating Position	Any position
[Ui] Rated Insulation Voltage	250 V (pollution degree 3) conforming to EN/IEC 60947-1
[Uimp] Rated Impulse Withstand Voltage	2.5 kV conforming to EN/IEC 60947-1
Contacts Material	Silver alloy contacts
Contact Operation	Standard
Positive Opening	Without
Short-Circuit Protection	10 A cartridge fuse conforming to EN/IEC 60947-5-1
[Ith] Conventional Free Air Thermal Current	10 A

Disclaimer: This documentation is not intended as a substitute for and is not to be used for determining suitability or reliability of these products for specific user applications

[Icm] Rated Short-Circuit Making Capacity	12 kA at 600 V AC-15, 7200 VA 15 kA at 480 V AC-15, 7200 VA 30 kA at 240 V AC-15, 7200 VA 60 kA at 120 V AC-15, 7200 VA 0.27 kA at 250 V DC-13 0.55 kA at 125 V DC-13 0.1 kA at 600 V DC-13
Rated Breaking Capacity	1.2 kA at 600 V AC-15, 720 VA 1.5 kA at 480 V AC-15, 720 VA 3 kA at 240 V AC-15, 720 VA 6 kA at 120 V AC-15, 720 VA 0.27 kA at 250 V DC-13 0.55 kA at 125 V DC-13 0.1 kA at 600 V DC-13
Net Weight	0.181 kg
Device Presentation	Complete product
Cap/Operator Or Lens Colour	Green
[Us] Rated Supply Voltage	24...28 V
Light Block Supply	Full voltage
Type Of Operator	Spring return
Operator Profile	Projecting

Environment

Standards	EN/IEC 60947-1 UL 508 CSA C22.2 No 14 EN/IEC 60947-5-1 JIS C 852 JIS C 4520 EN/IEC 60947-5-4
Product Certifications	UL 508 NEMA
Protective Treatment	TC
Ambient Air Temperature For Storage	-40…70 °C
Ambient Air Temperature For Operation	-25…70 °C
Vibration Resistance	7 gn (f= 2…500 Hz) conforming to IEC 60068-2-6
Shock Resistance	50 gn conforming to IEC 60068-2-27
Electrical Shock Protection Class	Class II conforming to IEC 61140
Ip Degree Of Protection	IP66 conforming to IEC 60529
Nema Degree Of Protection	NEMA 1 NEMA 12 NEMA 13 NEMA 2 NEMA 3 NEMA 3R NEMA 4 NEMA 4X

Packing Units

Unit Type Of Package 1	PCE
Number Of Units In Package 1	1
Package 1 Height	4.801 cm
Package 1 Width	5.799 cm
Package 1 Length	9.401 cm

Package 1 Weight	226.796 g

Contractual warranty

Warranty	18 months

Sustainability

Green Premium™ label is Schneider Electric's commitment to delivering products with best-in-class environmental performance. Green Premium promises compliance with the latest regulations, transparency on environmental impacts, as well as circular and low-CO_2 products.

Guide to assessing product sustainability is a white paper that clarifies global eco-label standards and how to interpret environmental declarations.

Learn more about Green Premium >

Guide to assess a product's sustainability >

Transparency RoHS/REACh

Well-being performance

Reach Free Of Svhc	
Toxic Heavy Metal Free	
Mercury Free	
Rohs Exemption Information	Yes

Certifications & Standards

Reach Regulation	REACh Declaration
Eu Rohs Directive	Pro-active compliance (Product out of EU RoHS legal scope) EU RoHS Declaration
China Rohs Regulation	China RoHS declaration
Environmental Disclosure	Product Environmental Profile
Weee	The product must be disposed on European Union markets following specific waste collection and never end up in rubbish bins
Circularity Profile	No need of specific recycling operations

Dimensions Drawings

Dimensions

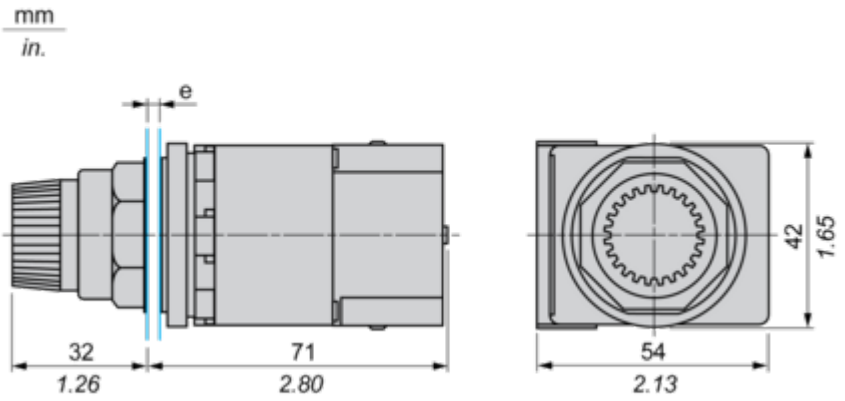

e panel thickness: 1 to 6 mm/ 0.04 to 0.24 in.