Product datasheet

Specifications

Green Premium™

octagonal pilot light Ø 30 - white - incandescent BA 9s - 230 V AC - IP66

9001SKP7A9

Discontinued on: 20-Oct-2020

End-of-service on: 11-Jul-2022

Discontinued

Main

Range Of Product	Harmony 9001SK
Product Or Component Type	Pilot light
Device Short Name	9001SK
Lens Type	Domed plastic
Light Block Supply	Via integral transformer 230 V AC 50/60 Hz 6 V)

Complementary

Bezel Material	Plastic
Mounting Diameter	30 mm
Shape Of Signaling Unit Head	Round
Cap/Operator Or Lens Colour	Amber
Light Source	incandescent
Bulb Base	BA 9s
[Us] Rated Supply Voltage	220...240 V AC 50/60 Hz
Tightening Torque	0.8 N.m conforming to EN/IEC 60947-1
Shape Of Screw Head	Cross slotted
Connections - Terminals	Screw clamp terminals, 1 x 0.22...2 x 1.5 mm² conforming to EN/IEC 60947-1
[Ith] Conventional Free Air Thermal Current	10 A
Short-Circuit Protection	10 A cartridge fuse conforming to EN/IEC 60947-5-1
[Ui] Rated Insulation Voltage	250 V (pollution degree 2) conforming to EN/IEC 60947-1
[Uimp] Rated Impulse Withstand Voltage	2.5 kV conforming to EN/IEC 60947-1
Operating Position	Any position
Cad Overall Width	54 mm
Cad Overall Height	70 mm
Cad Overall Depth	42 mm
Net Weight	0.181 kg
Device Presentation	Complete product

Environment

Electrical Shock Protection Class	Class II conforming to IEC 61140

Disclaimer: This documentation is not intended as a substitute for and is not to be used for determining suitability or reliability of these products for specific user applications

Protective Treatment	TC
Ip Degree Of Protection	IP66 conforming to IEC 60529
Nema Degree Of Protection	NEMA 1 NEMA 12 NEMA 13 NEMA 2 NEMA 3 NEMA 3R NEMA 4 NEMA 4X
Vibration Resistance	7 gn (f= 2…500 Hz) conforming to IEC 60068-2-6
Shock Resistance	50 gn conforming to IEC 60068-2-27
Ambient Air Temperature For Operation	-25…70 °C
Ambient Air Temperature For Storage	-40…70 °C
Standards	EN/IEC 60947-5-1 CSA C22.2 No 14 UL 508 JIS C8201-5-1 EN/IEC 60947-5-4 JIS C 852 EN/IEC 60947-1 JIS C8201-1
Product Certifications	UL 508 NEMA

Contractual warranty

Warranty	18 months

Sustainability

Green Premium™ label is Schneider Electric's commitment to delivering products with best-in-class environmental performance. Green Premium promises compliance with the latest regulations, transparency on environmental impacts, as well as circular and low-CO_2 products.

Guide to assessing product sustainability is a white paper that clarifies global eco-label standards and how to interpret environmental declarations.

Learn more about Green Premium >

Guide to assess a product's sustainability >

Transparency RoHS/REACh

Well-being performance

Reach Free Of Svhc	
Toxic Heavy Metal Free	
Mercury Free	
Rohs Exemption Information	Yes

Certifications & Standards

Reach Regulation	REACh Declaration
Eu Rohs Directive	Pro-active compliance (Product out of EU RoHS legal scope) EU RoHS Declaration
China Rohs Regulation	China RoHS declaration
Environmental Disclosure	Product Environmental Profile
Weee	The product must be disposed on European Union markets following specific waste collection and never end up in rubbish bins
Circularity Profile	End of Life Information

Dimensions Drawings

Dimensions

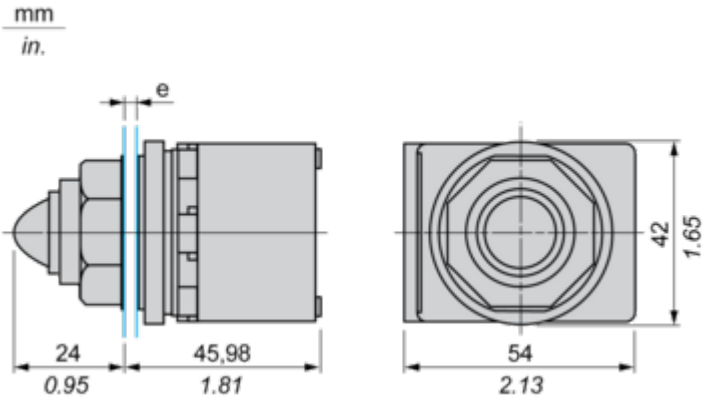

e panel thickness: 1 to 6 mm / 0.04 to 0.24 in.