Product datasheet

Specifications

Green Premium™

motion servo drive, Lexium 28, single and three phase, 200 to 240V, 200W

LXM28AU02M3X

Main

Range Of Product	Lexium 28
Product Or Component Type	Motion servo drive
Device Short Name	LXM28A
Format Of The Drive	Compact housing
Line Current	2.4 A 226.8 % at 220 V, single phase 2.4 A 200.7 % at 220 V, three phase

Complementary

Network Number Of Phases	Three phase Single phase
[Us] Rated Supply Voltage	200...240 V (- 10...15 %) for three phase 200...240 V (- 20...15 %) for single phase
Supply Voltage Limits	200…255 V three phase 170…255 V single phase
Supply Frequency	50/60 Hz - 5...5 %
Network Frequency	47.5...63 Hz
Emc Filter	Without EMC filter
Continuous Output Current	1.5 A at 16 kHz
Output Current 3S Peak	4.5 A at 220 V
Continuous Power	200 W at 220 V
Nominal Power	0.2 kW at 220 V 16 kHz
Switching Frequency	16 kHz
Overvoltage Category	III
Maximum Leakage Current	1.3 mA
Output Voltage	<= power supply voltage
Electrical Isolation	Between power and control
Type Of Cable	Shielded motor cable (temperature: 0…55 °C) copper
Electrical Connection	Spring terminal, clamping capacity: 0.82...1 mm², AWG 18 (L1-L2) Spring terminal, clamping capacity: 0.82...1 mm², AWG 18 (R, S, T) Spring terminal, clamping capacity: 0.82...1 mm², AWG 18 (U, V, W, PE) Spring terminal, clamping capacity: 0.82...1 mm², AWG 18 (PA/+, PBe)
Discrete Input Number	8 programmable (CN1) 1 pulse train input (PTI) (CN1) 2 fast capture (CN1) 1 safety function STO (CN9)
Discrete Input Voltage	24 V DC for logic

Disclaimer: This documentation is not intended as a substitute for and is not to be used for determining suitability or reliability of these products for specific user applications

Discrete Input Logic	Positive or negative (CN1)
Discrete Output Number	5 logic output (CN1) at 12...24 V DC 1 pulse train output (PTO) (CN1)
Discrete Output Voltage	12...24 V DC
Discrete Output Logic	Positive or negative (CN1)
Analogue Input Number	2
Absolute Accuracy Error	0.1 %
Analogue Input Type	V_REF voltage analog input: - 10...10 V, impedance: 10 kOhm, resolution: 14 bits T_REF voltage analog input
Control Signal Type	Servo motor encoder feedback CN2
Protection Type	Against reverse polarity: inputs signal Against short-circuits: outputs signal Overcurrent: motor Overvoltage: motor Undervoltage: motor Overheating: motor Overload: motor Overspeed: motor
Safety Function	STO (safe torque off), integrated
Safety Level	SIL 2 conforming to IEC 61800-5-2: 2007 SIL 2 conforming to IEC 61508-1: 2010 PL d/category 3 conforming to ISO 13849-1: 2008 SIL 2 conforming to ISO 13849-1: 2009/AC SIL 2 conforming to IEC 60204-1: 2006 SIL 2 conforming to IEC 60204-1: 2009/A1 SIL 2 conforming to IEC 60204-1: 2010/AC SIL 2 conforming to IEC 62061: 2012
Communication Interface	CANopen, integrated CANmotion, integrated
Connector Type	RJ45 (CN4) for CANopen, CANmotion
Method Of Access	Slave
Transmission Rate	250 kbit/s for bus length of 100…250 m for CANopen, CANmotion 500 kbit/s for bus length of 4…100 m for CANopen, CANmotion 1 Mbit/s for bus length of 4 m for CANopen, CANmotion
Number Of Addresses	1…127 for CANopen, CANmotion
Physical Interface	RS485 for Modbus Serial line slave
Status Led	1 LED (red) charge 1 LED (green) RUN 1 LED (red) error
Signalling Function	Servo status and fault codes five 7-segment display units
Marking	CSA CULus CE
Type Of Cooling	Natural convection
Operating Position	Vertical
Product Compatibility	Servo motor BCH2 (60 mm, 1 motor stacks) at 200 W
Width	55 mm
Height	150 mm
Depth	146 mm
Net Weight	1 kg
Output Current 3S Peak 2	4.5 A at 220 V
Output Current 3S Peak 3	4.5 A at 220 V

Environment

Electromagnetic Compatibility	Conducted emission - test level: level 3 category C3 conforming to IEC 61800-3
Standards	IEC 61800-5-1
Product Certifications	cULus CSA CE
Ip Degree Of Protection	IP20
Vibration Resistance	3M4 amplitude = 3 mm (f = 9…200 Hz) conforming to IEC 60721-3-3
Shock Resistance	10 gn, type I conforming to IEC 60721-3-3
Relative Humidity	5…95 % without condensation
Ambient Air Temperature For Operation	0…55 °C
Ambient Air Temperature For Storage	-25…65 °C
Operating Altitude	<= 1000 m without derating > 1000...2000 m 1 % per 100 m

Packing Units

Unit Type Of Package 1	PCE
Number Of Units In Package 1	1
Package 1 Height	7.5 cm
Package 1 Width	23 cm
Package 1 Length	23.7 cm
Package 1 Weight	1.26 kg
Unit Type Of Package 2	S03
Number Of Units In Package 2	5
Package 2 Height	30 cm
Package 2 Width	29.9 cm
Package 2 Length	39.8 cm
Package 2 Weight	6.89 kg
Unit Type Of Package 3	PAL
Number Of Units In Package 3	40
Package 3 Height	60 cm
Package 3 Width	60 cm
Package 3 Length	80 cm
Package 3 Weight	55.12 kg

Sustainability

Green Premium™ label is Schneider Electric's commitment to delivering products with best-in-class environmental performance. Green Premium promises compliance with the latest regulations, transparency on environmental impacts, as well as circular and low-CO_2 products.

Guide to assessing product sustainability is a white paper that clarifies global eco-label standards and how to interpret environmental declarations.

Learn more about Green Premium >

Guide to assess a product's sustainability >

Transparency RoHS/REACh

Well-being performance

Reach Free Of Svhc	
Mercury Free	
Rohs Exemption Information	Yes
Pvc Free	

Certifications & Standards

Reach Regulation	REACh Declaration
Eu Rohs Directive	Pro-active compliance (Product out of EU RoHS legal scope)
China Rohs Regulation	China RoHS declaration
Environmental Disclosure	Product Environmental Profile
Weee	The product must be disposed on European Union markets following specific waste collection and never end up in rubbish bins
Circularity Profile	End of Life Information

Dimensions Drawings

Dimensions

Dimensions of Drive

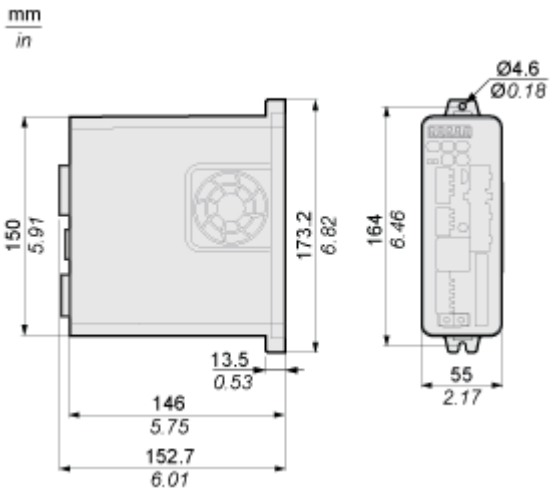

Mounting and Clearance

Mounting Clearance
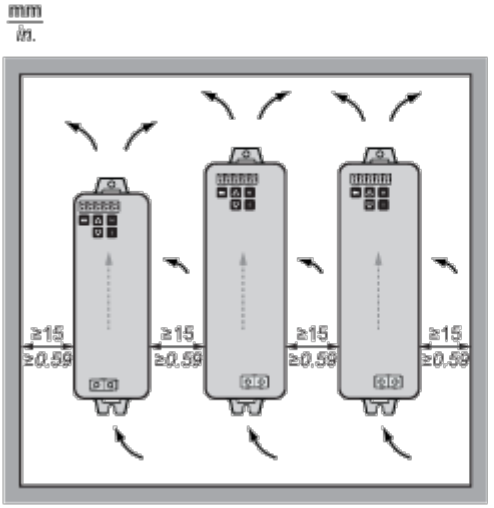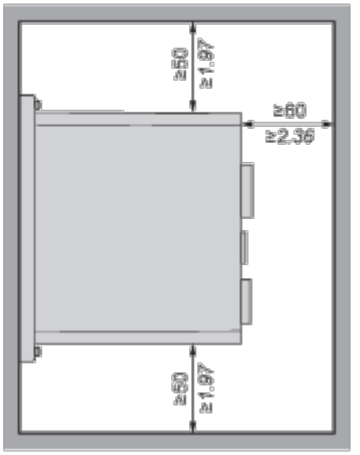
Mounting Distances and Air Circulation