Product datasheet

Specifications

Green Premium™

Analog input module, Modicon M238 logic controller, 8 I, 200...600 °C, 12 bits, 24 V DC, RJ11 connectors

TM2ARI8LRJ

Discontinued - Service only

Discontinued on: 06-Nov-2020

To be end-of-service on: 30-Jun-2024

Main

Range Of Product	Modicon M238 logic controller
Product Or Component Type	Analog input module
Analogue Input Number	8
Analogue Input Type	Pt 100 temperature probe - 200...600 °C non differential Pt 1000 temperature probe - 50...200 °C non differential

Complementary

Range Compatibility	Advantys OTB Twido
Analogue Input Resolution	12 bits
Lsb Value	0.006 °C Pt 1000 0.2 °C Pt 100
Input Impedance	>= 10 kOhm
Sampling Duration	160 ms
Acquisition Period	320 ms per group of channel + 1 controller cycle time
Measurement Error	+/- 0.3 % of full scale Pt 1000 at 25 °C +/- 0.5 % of full scale Pt 100 at 25 °C
Temperature Coefficient	+/-0.01 %FS/°C
Repeat Accuracy	+/- 0.1 °C
Total Error	1 °C, analogue input type: Pt 1000 4 °C, analogue input type: Pt 100
Insulation Between Channel And Internal Logic	Photocoupler
Supply	External supply
[Us] Rated Supply Voltage	24 V DC
Supply Voltage Limits	19.2…30 V
Electrical Connection	1 removable screw terminal block power supply 8 connectors RJ11 sensors
Current Consumption	<= 140 mA at 24 V DC external 90 mA at 5 V DC internal
Net Weight	0.19 kg

Environment

Disclaimer: This documentation is not intended as a substitute for and is not to be used for determining suitability or reliability of these products for specific user applications

Dielectric Strength	500 V between the I/O and the external supply circuit 2500 V between the I/O and internal logic
Width	39.1 mm
Depth	70 mm
Height	90 mm

Packing Units

Unit Type Of Package 1	PCE
Number Of Units In Package 1	1
Package 1 Height	7.5 cm
Package 1 Width	10.5 cm
Package 1 Length	12.5 cm
Package 1 Weight	148.0 g
Unit Type Of Package 2	S03
Number Of Units In Package 2	18
Package 2 Height	30.0 cm
Package 2 Width	30.0 cm
Package 2 Length	40.0 cm
Package 2 Weight	3.179 kg

Contractual warranty

Warranty	18 months

Sustainability

Green Premium™ label is Schneider Electric's commitment to delivering products with best-in-class environmental performance. Green Premium promises compliance with the latest regulations, transparency on environmental impacts, as well as circular and low-CO_2 products.

Guide to assessing product sustainability is a white paper that clarifies global eco-label standards and how to interpret environmental declarations.

Learn more about Green Premium >

Guide to assess a product's sustainability >

Transparency RoHS/REACh

Well-being performance

Mercury Free	
Rohs Exemption Information	Yes
Pvc Free	

Certifications & Standards

Reach Regulation	REACh Declaration
Eu Rohs Directive	Pro-active compliance (Product out of EU RoHS legal scope)
China Rohs Regulation	China RoHS declaration
Environmental Disclosure	Product Environmental Profile
Weee	The product must be disposed on European Union markets following specific waste collection and never end up in rubbish bins
Circularity Profile	End of Life Information

Dimensions Drawings

Analog Input Module (8-channel, Temperature Probe)

Dimensions

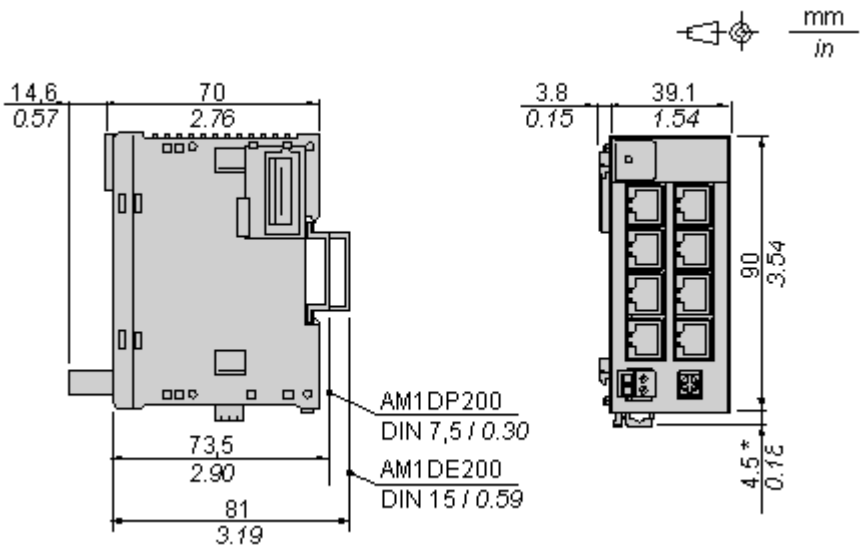

NOTE: * 8.5 mm (0.33 in) when the clip-on lock is pulled out.

Mounting and Clearance

DIN Rail Mounting

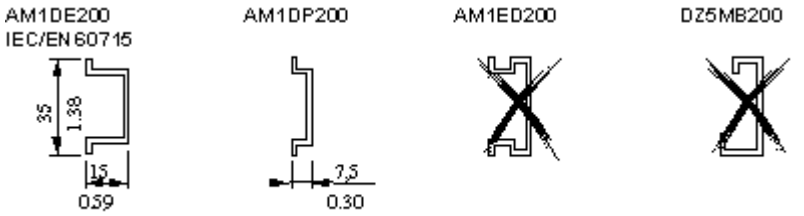

Rail depth	Catalogue part number
15 mm (0.59 in.)	AM1DE200
7,5 mm (0.30 in.)	AM1DP200

NOTE: Do not use AM1ED200 and DZ5MB200

Module Mounting on a Panel Surface

Mounting Hole Layout

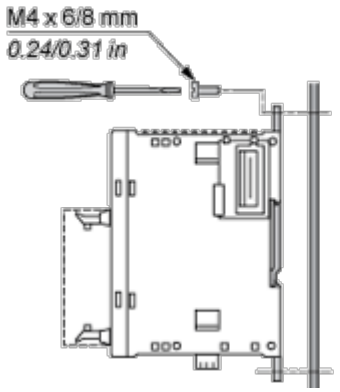

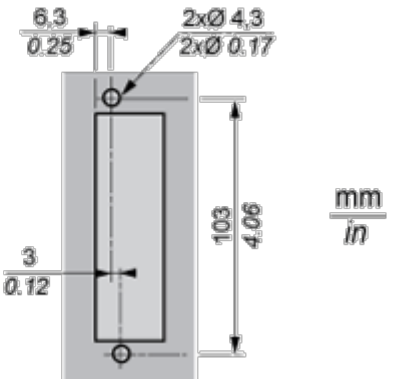

Connections and Schema

Wiring Requirements

Cable Types and Wire Sizes for Removable Screw Terminal Block

9 / 0.35 mm / in.							
mm²	0,14...1,5	0,25...0,5	0,25...1,5	0,14...0,5	0,14...0,75	0,25...0,34	0,5
AWG	26...16	24...20	24...16	26...20	26...18	24...22	20

Analog Input Module (8-channel, Temperature Probe)
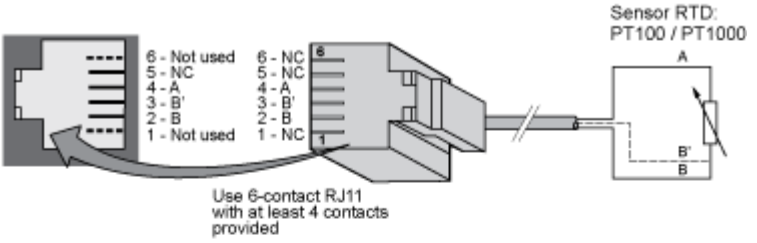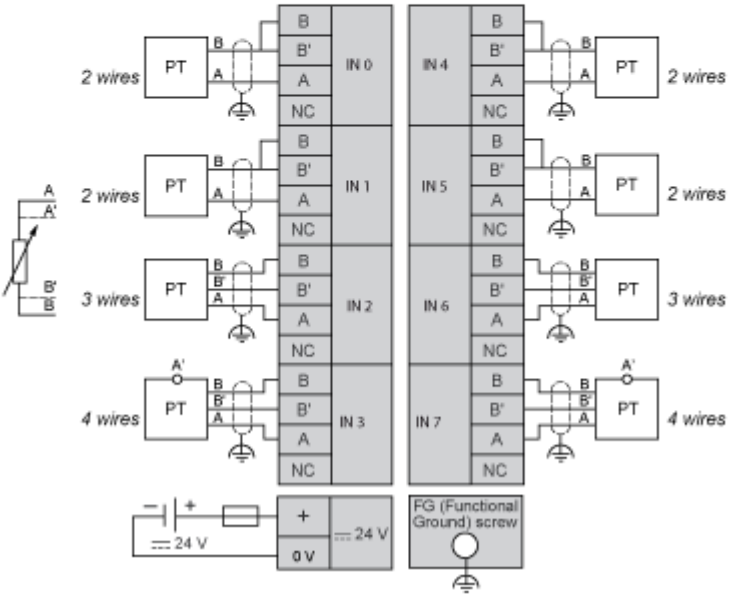
Wiring Diagram