Product datasheet

Specifications

Green Premium™

Analog output module, Modicon M238 logic controller, 2 outputs voltage, 1 removable screw terminal block

TM2AVO2HT

Discontinued - Service only

To be discontinued on: 30-Jun-2024

To be end-of-service on: 30-Jun-2024

Main

Range Of Product	Modicon M238 logic controller
Product Or Component Type	Analog output module
Analogue Output Number	2
Analogue Output Type	Voltage: +/- 10 V

Complementary

Range Compatibility	Advantys OTB Twido
Analogue Output Resolution	11 bits + sign
Lsb Value	+/- 9.8 mV voltage
Load Type	Resistive
Load Impedance Ohmic	<= 3000 Ohm voltage
Stabilisation Time	2 ms
Conversion Time	2 ms + 1 controller cycle time
Measurement Error	+/- 0.5 % of full scale at 25 °C
Temperature Coefficient	+/-0.01 %FS/°C
Repeat Accuracy	+/-0.1 %FS
Non-Linearity	+/- 0.2 %FS
Output Ripple	<= 1 LSB
Total Error	+/-1 %FS
Type Of Cable	Twisted shielded cable
Insulation Between Channel And Internal Logic	Photocoupler
Supply	External supply
[Us] Rated Supply Voltage	24 V DC
Supply Voltage Limits	19.2…30 V
Electrical Connection	1 removable screw terminal block
Current Consumption	60 mA at 5 V DC internal 60 mA at 24 V DC external
Net Weight	0.085 kg

Disclaimer: This documentation is not intended as a substitute for and is not to be used for determining suitability or reliability of these products for specific user applications

Environment

Dielectric Strength	2500 V between the I/O and internal logic
Width	23.5 mm
Depth	70 mm
Height	90 mm

Packing Units

Unit Type Of Package 1	PCE
Number Of Units In Package 1	1
Package 1 Height	7.5 cm
Package 1 Width	10.5 cm
Package 1 Length	12.5 cm
Package 1 Weight	145.0 g
Unit Type Of Package 2	S03
Number Of Units In Package 2	18
Package 2 Height	30.0 cm
Package 2 Width	30.0 cm
Package 2 Length	40.0 cm
Package 2 Weight	3.125 kg

Contractual warranty

Warranty	18 months

Sustainability

Green Premium™ label is Schneider Electric's commitment to delivering products with best-in-class environmental performance. Green Premium promises compliance with the latest regulations, transparency on environmental impacts, as well as circular and low-CO_2 products.

Guide to assessing product sustainability is a white paper that clarifies global eco-label standards and how to interpret environmental declarations.

Learn more about Green Premium >

Guide to assess a product's sustainability >

Transparency RoHS/REACh

Well-being performance

Mercury Free	
Rohs Exemption Information	Yes
Pvc Free	

Certifications & Standards

Reach Regulation	REACh Declaration
Eu Rohs Directive	Pro-active compliance (Product out of EU RoHS legal scope)
China Rohs Regulation	China RoHS declaration
Environmental Disclosure	Product Environmental Profile
Weee	The product must be disposed on European Union markets following specific waste collection and never end up in rubbish bins
Circularity Profile	End of Life Information

Dimensions Drawings

Analog Output Module (2-channel, Voltage)

Dimensions

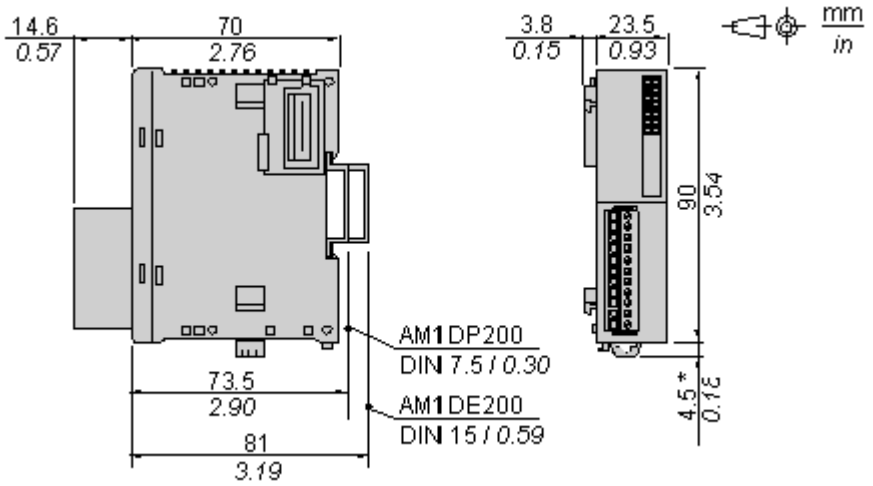

NOTE: * 8.5 mm (0.33 in) when the clip-on lock is pulled out.

Mounting and Clearance

DIN Rail Mounting

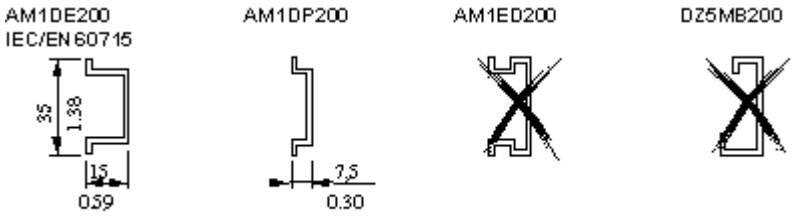

Rail depth	Catalogue part number
15 mm (0.59 in.)	AM1DE200
7,5 mm (0.30 in.)	AM1DP200

NOTE: Do not use AM1ED200 and DZ5MB200

Module Mounting on a Panel Surface

Mounting Hole Layout

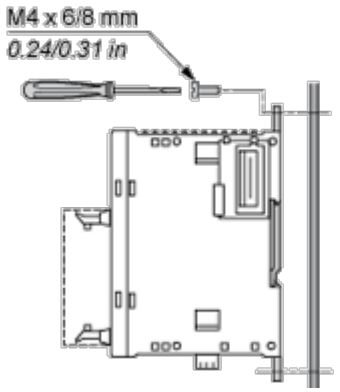

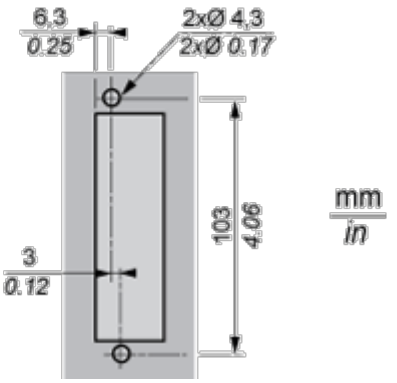

Connections and Schema

Wiring Requirements

Cable Types and Wire Sizes for Removable Screw Terminal Block

9 / 0.35 mm / in.							
mm²	0,14...1,5	0,25...0,5	0,25...1,5	0,14...0,5	0,14...0,75	0,25...0,34	0,5
AWG	26...16	24...20	24...16	26...20	26...18	24...22	20

Analog Output Module (2-channel, Voltage)

Wiring Diagram

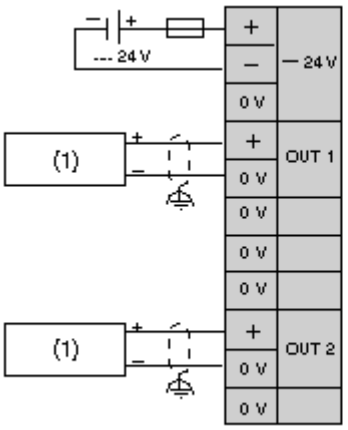

(1) Voltage/current preactuator