Product datasheet

Specifications

Green Premium™

Discrete input module, Modicon M238 logic controller, 8 inputs 120 V AC, 1 remvbl screw terminal block

TM2DAI8DT

Discontinued

Discontinued on: 01-Nov-2020

Main

Range Of Product	Modicon M238 logic controller
Product Or Component Type	Discrete input module
Discrete Input Number	8
Discrete Input Voltage	120 V
Discrete Input Voltage Type	AC

Complementary

Range Compatibility	Twido Advantys OTB
Input Voltage Limits	85...132 V
Discrete Input Current	7.5 mA
Input Impedance	11 kOhm
Number Of Common Point	1
Response Time	25 ms at state 1 30 ms at state 0
Isolation Between Channels	None
Isolation Between Channels And Internal Logic	1500 V for 1 minute
Current Consumption	55 mA at 5 V DC at state 1
Local Signalling	1 display block
Electrical Connection	1 removable screw terminal block
Mounting Support	35 mm symmetrical DIN rail
Net Weight	0.085 kg

Environment

Depth	70 mm
Height	90 mm
Width	23.5 mm

Packing Units

Unit Type Of Package 1	PCE
Number Of Units In Package 1	1

Disclaimer: This documentation is not intended as a substitute for and is not to be used for determining suitability or reliability of these products for specific user applications

Package 1 Height	7.7 cm
Package 1 Width	10.5 cm
Package 1 Length	12.5 cm
Package 1 Weight	155.0 g
Unit Type Of Package 2	S03
Number Of Units In Package 2	18
Package 2 Height	30.0 cm
Package 2 Width	30.0 cm
Package 2 Length	40.0 cm
Package 2 Weight	3.305 kg

Contractual warranty

Warranty	18 months

Sustainability

Green Premium™ label is Schneider Electric's commitment to delivering products with best-in-class environmental performance. Green Premium promises compliance with the latest regulations, transparency on environmental impacts, as well as circular and low-CO_2 products.

Guide to assessing product sustainability is a white paper that clarifies global eco-label standards and how to interpret environmental declarations.

Learn more about Green Premium >

Guide to assess a product's sustainability >

Transparency RoHS/REACh

Well-being performance

Mercury Free	
Rohs Exemption Information	Yes
Pvc Free	

Certifications & Standards

Reach Regulation	REACh Declaration
Eu Rohs Directive	Pro-active compliance (Product out of EU RoHS legal scope)
China Rohs Regulation	China RoHS declaration
Environmental Disclosure	Product Environmental Profile
Weee	The product must be disposed on European Union markets following specific waste collection and never end up in rubbish bins
Circularity Profile	End of Life Information

Dimensions Drawings

Digital Input Module (8-channel, 120 Vac)

Dimensions

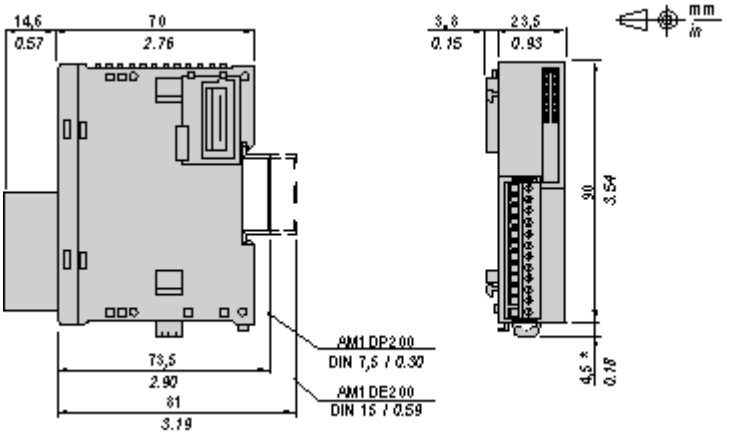

NOTE: * 8.5 mm (0.33 in) when the clamp is pulled out.

Mounting and Clearance

DIN Rail Mounting

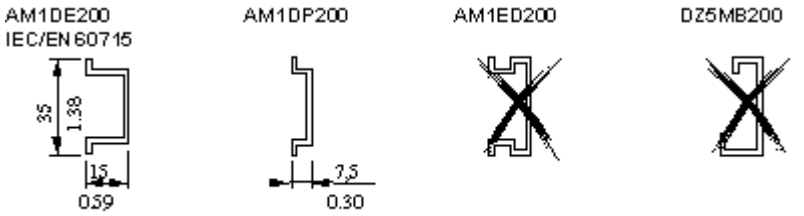

Rail depth	Catalogue part number
15 mm (0.59 in.)	AM1DE200
7,5 mm (0.30 in.)	AM1DP200

NOTE: Do not use AM1ED200 and DZ5MB200

Module Mounting on a Panel Surface

Mounting Hole Layout

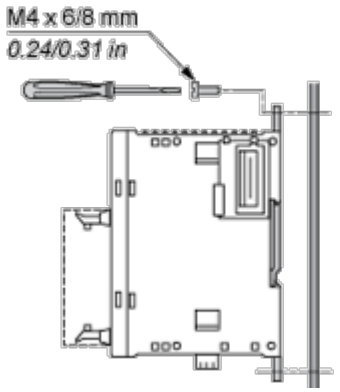

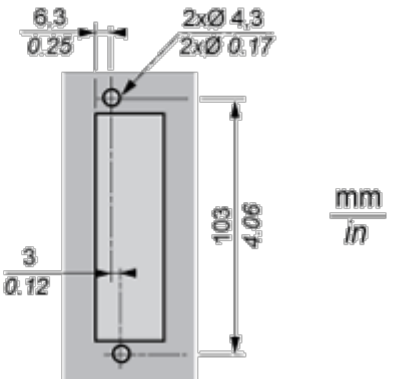

Connections and Schema

Wiring Requirements

Cable Types and Wire Sizes for Removable Screw Terminal Block

9 / 0.35 mm / in.							
mm²	0,14...1,5	0,25...0,5	0,25...1,5	0,14...0,5	0,14...0,75	0,25...0,34	0,5
AWG	26...16	24...20	24...16	26...20	26...18	24...22	20

Digital Input Module (8-channel, 120 Vac)

Wiring Diagram

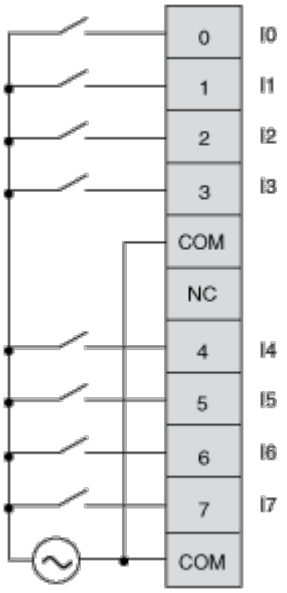

The two COM terminals are **not** connected together internally.