Product datasheet

Specifications

Green Premium™

discrete output module, Modicon TM3, 16 outputs transistor PNP, HE10

TM3DQ16TK

Main

Range Of Product	Modicon TM3
Product Or Component Type	Discrete output module
Range Compatibility	Modicon M241 Modicon M251 Modicon M221 Modicon M262
Discrete Output Type	Transistor
Discrete Output Number	16
Discrete Output Logic	Positive logic (source)
Discrete Output Voltage	24 V DC for transistor output
Discrete Output Current	100 mA for transistor output

Complementary

Discrete I/O Number	16
Current Consumption	5 mA at 5 V DC via bus connector (at state off) 0 mA at 24 V DC via bus connector (at state off) 15 mA at 5 V DC via bus connector (at state on) 20 mA at 24 V DC via bus connector (at state on)
Response Time	450 µs (turn-on) 450 µs (turn-off)
Maximum Leakage Current	0.1 mA for transistor output
Maximum Voltage Drop	<0.4 V
Maximum Tungsten Load	<9.6 W for transistor output
Local Signalling	1 LED per channel (green) for output status
Electrical Connection	HE-10 connectorfor outputs
Maximum Cable Distance Between Devices	Unshielded cable: <5 m for transistor output
Insulation	Between output and internal logic at 500 V AC Non-insulated between outputs
Marking	CE
Mounting Support	Top hat type TH35-15 rail conforming to IEC 60715 Top hat type TH35-7.5 rail conforming to IEC 60715 plate or panel with fixing kit
Height	90 mm
Depth	81.3 mm
Width	21.4 mm
Net Weight	0.72 kg

Disclaimer: This documentation is not intended as a substitute for and is not to be used for determining suitability or reliability of these products for specific user applications

Environment

Standards	IEC 61131-2
Product Certifications	cULus CE UKCA RCM EAC cULus HazLoc
Resistance To Electrostatic Discharge	8 kV in air conforming to IEC 61000-4-2 4 kV on contact conforming to IEC 61000-4-2
Resistance To Electromagnetic Fields	10 V/m 80 MHz...1 GHz conforming to IEC 61000-4-3 3 V/m 1.4 GHz...2 GHz conforming to IEC 61000-4-3 1 V/m 2 GHz...3 GHz conforming to IEC 61000-4-3
Resistance To Magnetic Fields	30 A/m 50/60 Hz conforming to IEC 61000-4-8
Resistance To Fast Transients	1 kV for I/O conforming to IEC 61000-4-4
Surge Withstand	1 kV I/O common mode conforming to IEC 61000-4-5 DC
Resistance To Conducted Disturbances	10 V 0.15...80 MHz conforming to IEC 61000-4-6 3 V spot frequency (2, 3, 4, 6.2, 8.2, 12.6, 16.5, 18.8, 22, 25 MHz) conforming to Marine specification (LR, ABS, DNV, GL)
Electromagnetic Emission	Radiated emissions - test level: 40 dBµV/m QP class A (10 m) at 30…230 MHz conforming to IEC 55011 Radiated emissions - test level: 47 dBµV/m QP class A (10 m) at 230…1000 MHz conforming to IEC 55011
Ambient Air Temperature For Operation	-10…35 °C vertical installation -10…55 °C horizontal installation
Ambient Air Temperature For Storage	-25…70 °C
Relative Humidity	10…95 %, without condensation (in operation) 10…95 %, without condensation (in storage)
Ip Degree Of Protection	IP20 with protective cover in place
Pollution Degree	2
Operating Altitude	0...2000 m
Storage Altitude	0…3000 m
Vibration Resistance	3.5 mm at 5…8.4 Hz on DIN rail 3 gn at 8.4…150 Hz on DIN rail 3.5 mm at 5…8.4 Hz on panel 3 gn at 8.4…150 Hz on panel
Shock Resistance	15 gn for 11 ms

Packing Units

Unit Type Of Package 1	PCE
Number Of Units In Package 1	1
Package 1 Height	7.5 cm
Package 1 Width	12.5 cm
Package 1 Length	10.5 cm
Package 1 Weight	175.0 g
Unit Type Of Package 2	S04
Number Of Units In Package 2	42
Package 2 Height	30 cm
Package 2 Width	40 cm
Package 2 Length	60 cm

Package 2 Weight	8.628 kg
Unit Type Of Package 3	P12
Number Of Units In Package 3	504
Package 3 Height	75 cm
Package 3 Width	120 cm
Package 3 Length	80 cm
Package 3 Weight	116 kg

Sustainability

Green Premium™ label is Schneider Electric's commitment to delivering products with best-in-class environmental performance. Green Premium promises compliance with the latest regulations, transparency on environmental impacts, as well as circular and low-CO_2 products.

Guide to assessing product sustainability is a white paper that clarifies global eco-label standards and how to interpret environmental declarations.

Learn more about Green Premium >

Guide to assess a product's sustainability >

Transparency RoHS/REACh

Well-being performance

Toxic Heavy Metal Free	
Mercury Free	
Rohs Exemption Information	Yes
Pvc Free	

Certifications & Standards

Reach Regulation	REACh Declaration
Eu Rohs Directive	Pro-active compliance (Product out of EU RoHS legal scope) EU RoHS Declaration
China Rohs Regulation	China RoHS declaration
Environmental Disclosure	Product Environmental Profile
Weee	The product must be disposed on European Union markets following specific waste collection and never end up in rubbish bins
Circularity Profile	End of Life Information

Dimensions Drawings

Dimensions

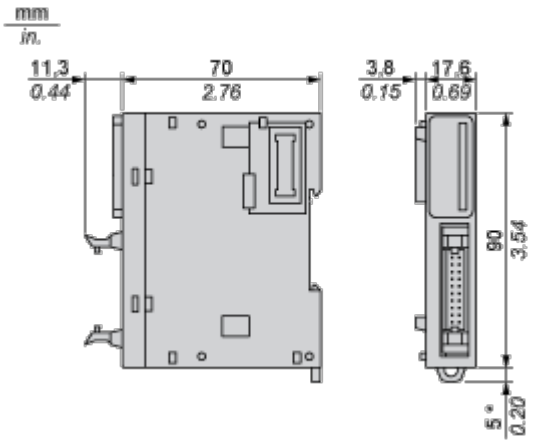

(*) 8.5 mm/0.33 in. when the clamp is pulled out.

Mounting and Clearance

Spacing Requirements

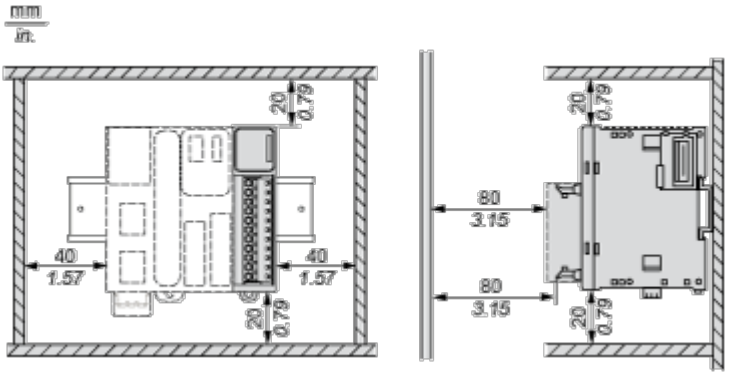

Mounting on a Rail

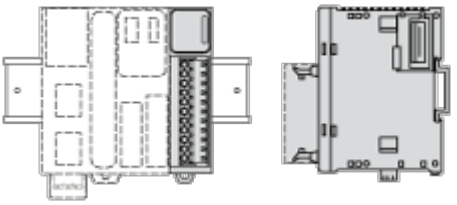

Incorrect Mounting

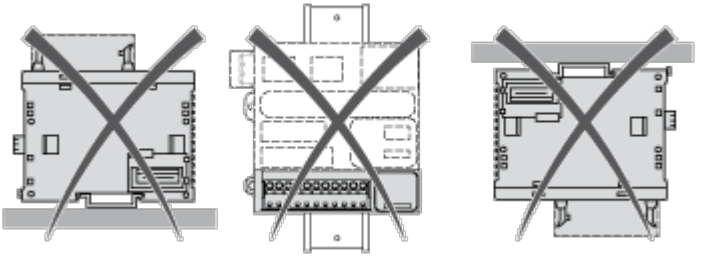

Mounting on a Panel Surface

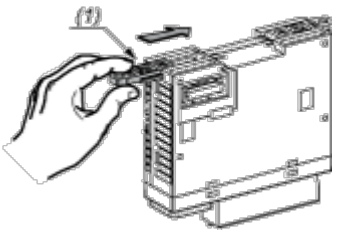

(1) Install a mounting strip

Mounting Hole Layout

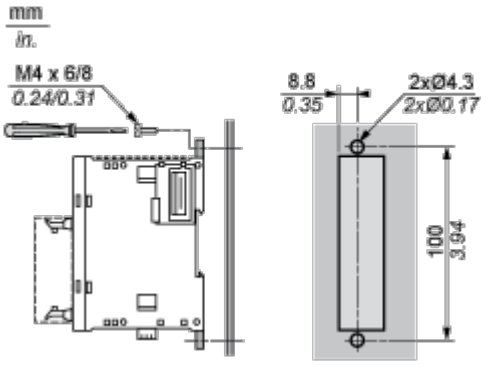

Connections and Schema

Digital Transistor Output Module (16-channel, Source)

Wiring Diagram

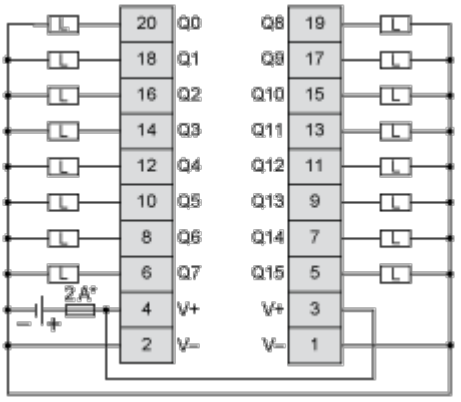

(*) Type T Fuse