Product datasheet

Specifications

Green Premium™

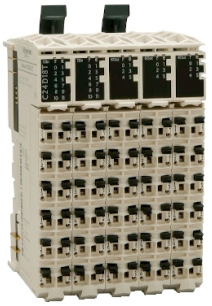

compact I/O expansion block, Modicon TM5, 36 IO, 24 DI, 12 DO relay

TM5C24D12R

Main

Range Of Product	Modicon TM5
Product Or Component Type	Compact I/O expansion block

Complementary

Enclosure Material	Plastic
Colour	White
Input/Output Number	36
For Enclosure Nominal Dimensions	24 I + 12 O
Number Of Modules	Digital input: 2 module(s) x 12 Relay output: 2 module(s) x 6
Discrete Input Number	24
Discrete Input Voltage	24 V
Discrete Input Voltage Type	DC
Input Voltage Limits	20.4...28.8 V
Discrete Input Logic	Sink
Discrete Input Current	3.75 mA
Input Impedance	6.4 kOhm
Analogue Input Number	0
Discrete Output Number	12
Discrete Output Type	Relay
Wiring Mode	1 wire for discrete input
Output Voltage	30 V DC 240 V AC
Output Voltage Limits	24...36 V DC 184...276 V AC
Discrete Output Function	1 NO
Discrete Output Logic	Source or sink
Discrete Output Current	2 A per output
Voltage State 0 Guaranteed	<= 5 V
Voltage State 1 Guaranteed	>= 15 V
Input Filtering	<= 100 ms hardware <= 25 ms configurable by software

Disclaimer: This documentation is not intended as a substitute for and is not to be used for determining suitability or reliability of these products for specific user applications

Response Time	<= 12 ms from state 0 to state 1 for output <= 10 ms from state 1 to state 0 for output
Minimum Switching Current	10 mA at 5 V DC
Isolation	500 Vrms AC insulation between channel and bus No insulation between channels
Mechanical Durability	20000000 cycles
Current Consumption	68 mA at 5 V DC bus 165 mA at 24 V DC input/output
Maximum Power Dissipation In W	4.3 W
Local Signalling	24 LEDs (green) for input status 4 LEDs (green) for power supply 4 LEDs (red) for power supply 12 LEDs (yellow) for output status
Electrical Connection	Removable spring terminal block
Marking	CE
Surge Withstand	0.5 kV differential mode 24 V DC conforming to IEC 61000-4-5 1 kV common mode 24 V DC conforming to IEC 61000-4-5 1 kV differential mode 230 V AC conforming to IEC 61000-4-5 2 kV common mode 230 V AC conforming to IEC 61000-4-5
Electromagnetic Compatibility	EN/IEC 61000-4-6
Disturbance Radiated/Conducted	CISPR 11

Environment

Standards	CSA C22.2 No 213 CSA C22.2 No 142 IEC 61131-2 UL 508
Product Certifications	cULus GOST-R CSA C-Tick
Ambient Air Temperature For Operation	-10…50 °C (vertical installation) -10…60 °C (horizontal installation)
Ambient Air Temperature For Storage	-40…70 °C
Relative Humidity	5…95 % without condensation
Ip Degree Of Protection	IP20 conforming to IEC 61131-2
Pollution Degree	2 conforming to IEC 60664
Operating Altitude	0...2000 m
Storage Altitude	0…3000 m
Vibration Resistance	1 gn at 8.4…150 Hz on DIN rail 3.5 mm at 5…8.4 Hz on DIN rail
Shock Resistance	15 gn for 11 ms
Resistance To Electrostatic Discharge	4 kV on contact conforming to IEC 61000-4-2 8 kV in air conforming to IEC 61000-4-2
Resistance To Electromagnetic Fields	1 V/m 2...2.7 GHz conforming to IEC 61000-4-3 10 V/m 80...2000 MHz conforming to IEC 61000-4-3
Resistance To Fast Transients	1 kV (I/O) conforming to IEC 61000-4-4 1 kV (shielded cable) conforming to IEC 61000-4-4 2 kV (power lines) conforming to IEC 61000-4-4
Mounting Support	DIN rail
Net Weight	0.26 kg

Packing Units

Unit Type Of Package 1	PCE
Number Of Units In Package 1	1
Package 1 Height	6.900 cm
Package 1 Width	9.200 cm
Package 1 Length	11.000 cm
Package 1 Weight	289.000 g
Unit Type Of Package 2	S03
Number Of Units In Package 2	36
Package 2 Height	30.000 cm
Package 2 Width	30.000 cm
Package 2 Length	40.000 cm
Package 2 Weight	10.821 kg

Contractual warranty

Warranty	18 months

Sustainability

Green Premium™ label is Schneider Electric's commitment to delivering products with best-in-class environmental performance. Green Premium promises compliance with the latest regulations, transparency on environmental impacts, as well as circular and low-CO_2 products.

Guide to assessing product sustainability is a white paper that clarifies global eco-label standards and how to interpret environmental declarations.

Learn more about Green Premium >

Guide to assess a product's sustainability >

Transparency RoHS/REACh

Well-being performance

Toxic Heavy Metal Free	
Mercury Free	
Rohs Exemption Information	Yes
Pvc Free	

Certifications & Standards

Reach Regulation	REACh Declaration
Eu Rohs Directive	Pro-active compliance (Product out of EU RoHS legal scope)
China Rohs Regulation	China RoHS declaration
Environmental Disclosure	Product Environmental Profile
Weee	The product must be disposed on European Union markets following specific waste collection and never end up in rubbish bins
Circularity Profile	End of Life Information

Presentation

TM5 Compact I/O Module

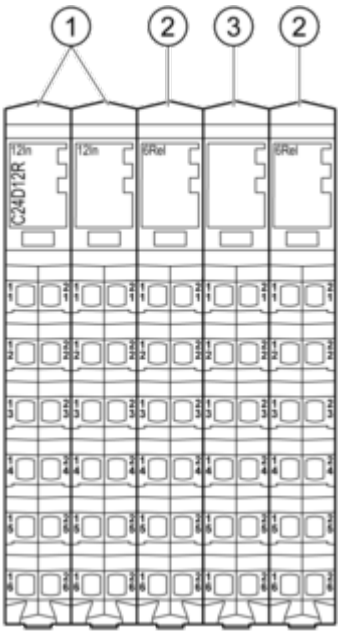

N°	Designation
1	Input electronic module / 12 digital inputs
2	Relay output electronic module / 6 relay outputs
3	Dummy module

Dimensions Drawings

Compact I/O Module

Dimensions

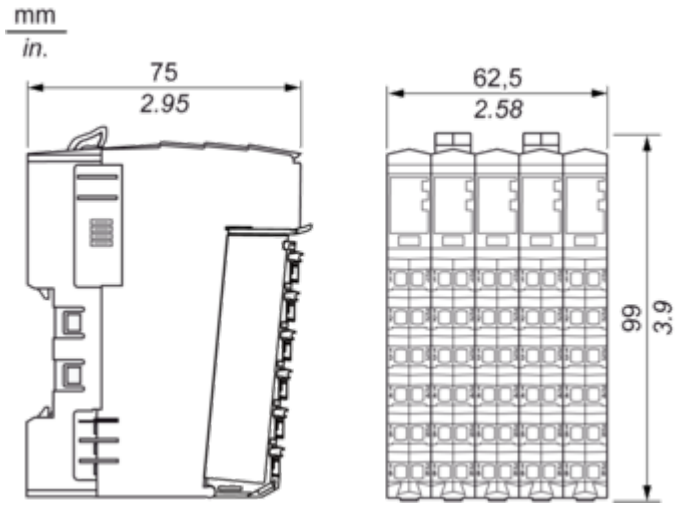

Mounting and Clearance

TM5 System

Spacing Requirements

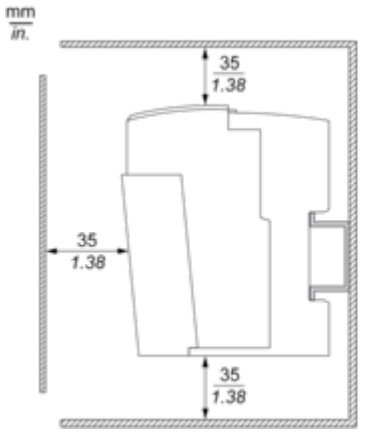

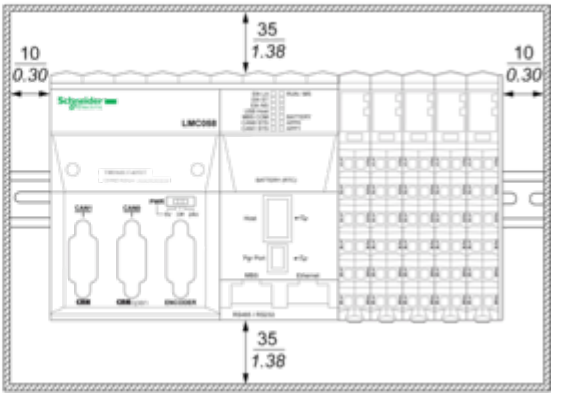

Mounting on a DIN Rail

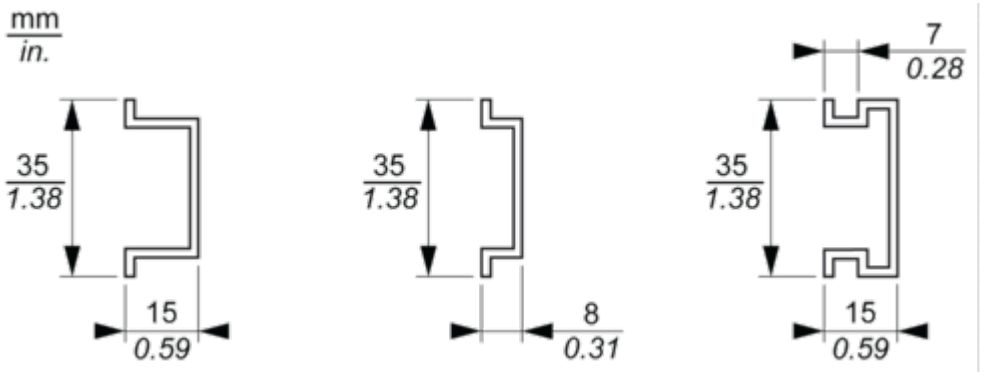

Connections and Schema

TM5 System Wiring Recommendations

Wire Sizes to Use with the Removable Spring Terminal Blocks

mm / in. 9 / 0.35				
mm²	0,08…2,5	0,25…2,5	0,25…1,5	2 x 0,25...2 x 0,75
AWG	28…14	24…14	24…16	2 x 24…2 x 18

Digital Input 12In

Wiring Diagram

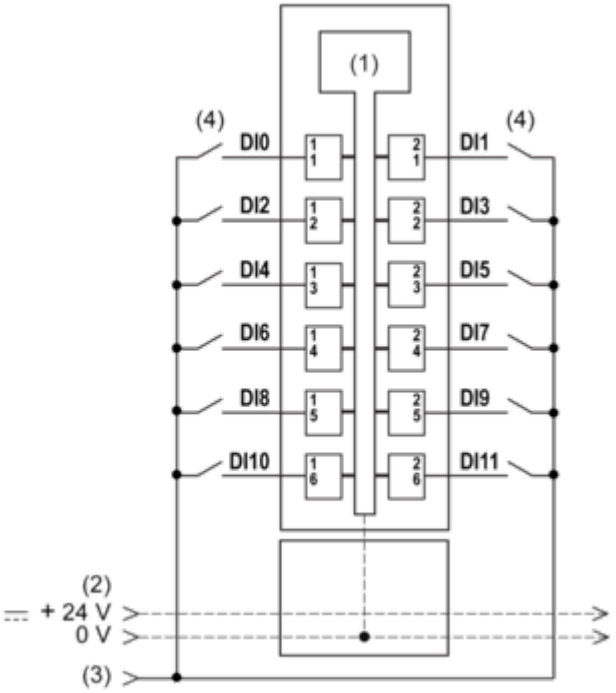

1 Internal electronics
2 24 Vdc I/O power segment integrated into the bus bases
3 24 Vdc I/O power segment by external connection
4 2-wire sensor

Digital Output Relay 6Rel

Wiring Diagram

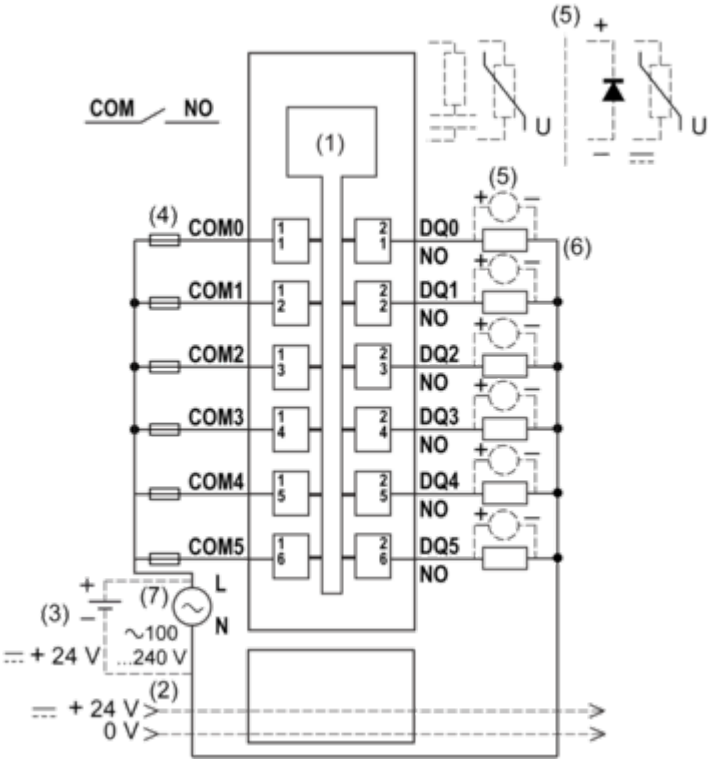

1 Internal electronics
2 24 Vdc I/O power segment integrated into the bus bases
3 External isolated power supply 24 Vdc
4 External fuse type T slow-blow 2 A 250 V
5 Inductive load protection
6 2-wire load
7 External power supply 100...240 Vac

Dummy Module

Wiring Diagram

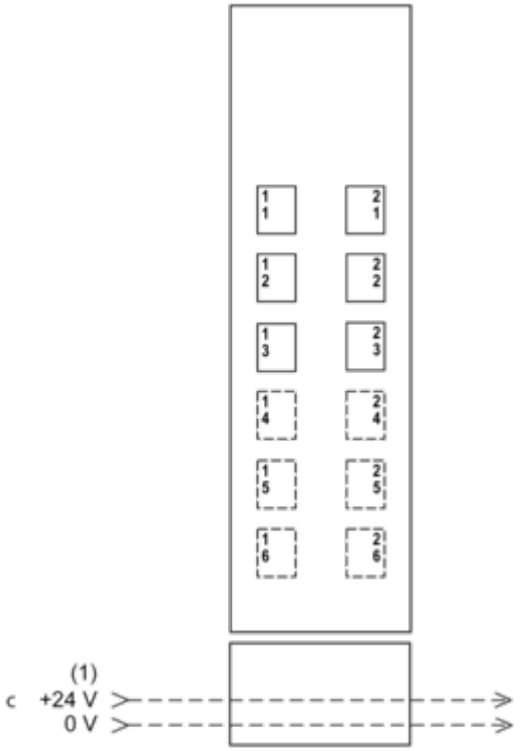

1 24 Vdc I/O power segment integrated into the bus bases

Performance Curves

Digital Output Relay Electronic Module

Electric Durability

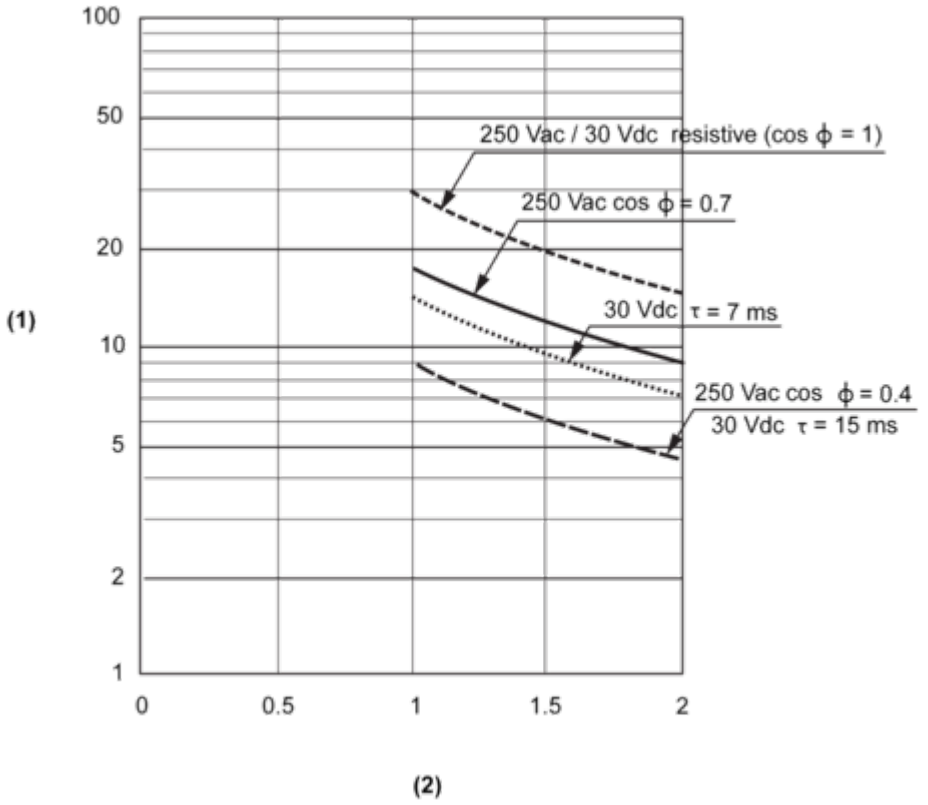

1 Switching procedures ($x10^4$)
2 Switching current in A