Product datasheet

Specifications

Green Premium™

Discontinued - Service only

Discrete input module, Modicon TM5, digital 2I, 100...240 V AC, 3 wires

TM5SDI2A

To be discontinued on: 01-Sept-2024

To be end-of-service on: 01-Sept-2024

Main

Range Of Product	Modicon TM5
Product Or Component Type	Discrete input module
Discrete Input Number	2
Discrete Input Voltage	100...240 V

Complementary

Range Compatibility	Modicon LMC058 PacDrive LMC motion controller Modicon M258
Product Compatibility	PacDrive LMC Pro Motion controller PacDrive LMC Pro 2 Logic controller PacDrive LMC Eco
Discrete Input Voltage Type	AC
Input Voltage Limits	100...240 V
Discrete Input Current	5…11 mA
Colour	Black
Input Filtering	<= 25 ms configurable by software <= 30 ms hardware from state 1 to state 0 <= 40 ms hardware from state 0 to state 1
Protection Type	Short-circuit protection
Isolation	No insulation between channels 2500 V AC insulation between channel and bus for 1 minute
Maximum Voltage Drop	<2 V at 500 mA for sensor supply
Maximum Supply Current For Sensors	500 mA
Current Consumption	28 mA at 5 V DC bus
Maximum Power Dissipation In W	0.69 W
Local Signalling	1 LED green for power supply 1 LED red for power supply 2 LEDs green for input status
Electrical Connection	3 wires
Marking	CE
Net Weight	0.025 kg

Disclaimer: This documentation is not intended as a substitute for and is not to be used for determining suitability or reliability of these products for specific user applications

Environment

Standards	UL 508 CSA C22.2 No 142 CSA C22.2 No 213 IEC 61131-2
Product Certifications	GOST-R CSA C-Tick cULus
Ambient Air Temperature For Operation	-10…55 °C without derating (horizontal installation) -10…60 °C with derating factor (horizontal installation) -10…50 °C (vertical installation)
Ambient Air Temperature For Storage	-40…70 °C
Relative Humidity	5…95 % without condensation
Ip Degree Of Protection	IP20 conforming to IEC 61131-2
Pollution Degree	2 conforming to IEC 60664
Operating Altitude	0...2000 m
Storage Altitude	0…3000 m
Vibration Resistance	1 gn at 8.4…150 Hz on DIN rail 3.5 mm at 5…8.4 Hz on DIN rail
Shock Resistance	15 gn for 11 ms
Electromagnetic Compatibility	Electrostatic discharge immunity test, 4 kV on contact conforming to EN/IEC 61000-4-2 Electrostatic discharge immunity test, 8 kV in air conforming to EN/IEC 61000-4-2 Susceptibility to electromagnetic fields, 1 V/m 2...2.7 GHz conforming to EN/IEC 61000-4-3 Susceptibility to electromagnetic fields, 10 V/m 80...2000 MHz conforming to EN/IEC 61000-4-3 Electrical fast transient/burst immunity test, 1 kV I/O conforming to EN/IEC 61000-4-4 Electrical fast transient/burst immunity test, 1 kV shielded cable conforming to EN/IEC 61000-4-4 Electrical fast transient/burst immunity test, 2 kV power lines conforming to EN/IEC 61000-4-4 1.2/50 µs shock waves immunity test, 0.5 kV differential mode conforming to EN/IEC 61000-4-5 1.2/50 µs shock waves immunity test, 1 kV common mode conforming to EN/IEC 61000-4-5 Conducted RF disturbances conforming to EN/IEC 61000-4-6 Conducted and radiated emissions conforming to CISPR 11

Packing Units

Unit Type Of Package 1	PCE
Number Of Units In Package 1	1
Package 1 Height	2.0 cm
Package 1 Width	6.0 cm
Package 1 Length	10.5 cm
Package 1 Weight	39.0 g

Contractual warranty

Warranty	18 months

Sustainability

Green Premium™ label is Schneider Electric's commitment to delivering products with best-in-class environmental performance. Green Premium promises compliance with the latest regulations, transparency on environmental impacts, as well as circular and low-CO_2 products.

Guide to assessing product sustainability is a white paper that clarifies global eco-label standards and how to interpret environmental declarations.

Learn more about Green Premium >

Guide to assess a product's sustainability >

Transparency RoHS/REACh

Well-being performance

Reach Free Of Svhc	
Toxic Heavy Metal Free	
Mercury Free	
Rohs Exemption Information	Yes
Pvc Free	

Certifications & Standards

Reach Regulation	REACh Declaration
Eu Rohs Directive	Pro-active compliance (Product out of EU RoHS legal scope) EU RoHS Declaration
China Rohs Regulation	China RoHS declaration
Environmental Disclosure	Product Environmental Profile
Weee	The product must be disposed on European Union markets following specific waste collection and never end up in rubbish bins
Circularity Profile	End of Life Information

Dimensions Drawings

TM5 Slice

Dimensions

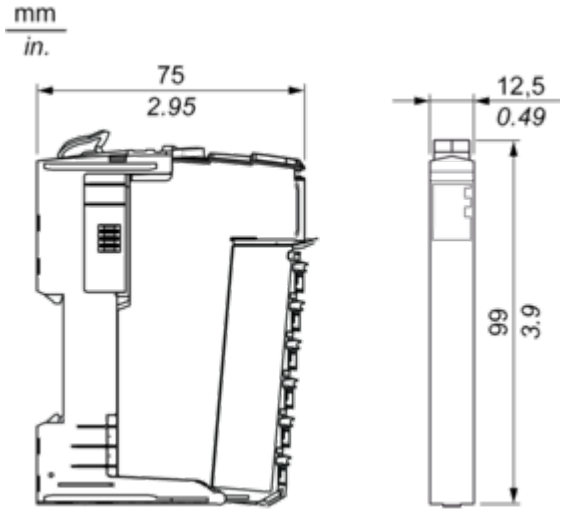

Mounting and Clearance

TM5 System

Spacing Requirements

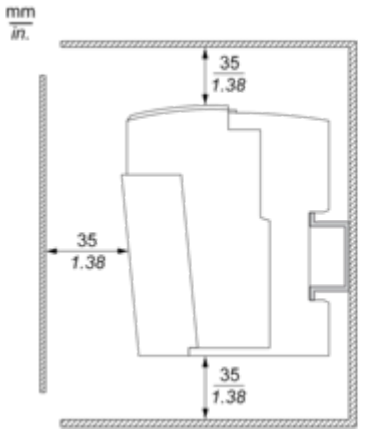

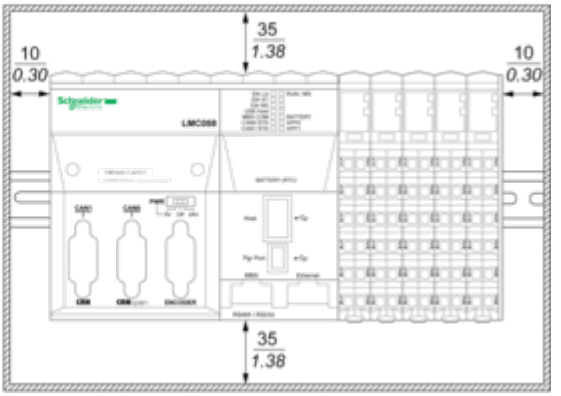

Mounting on a DIN Rail

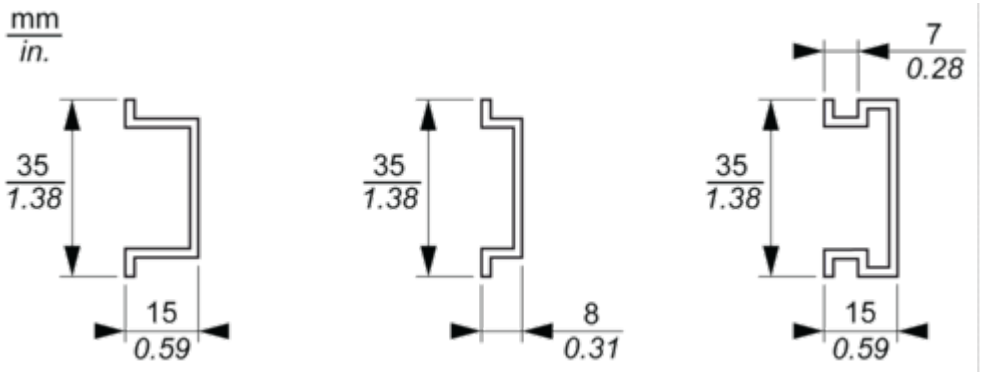

Connections and Schema

TM5 System Wiring Recommendations

Wire Sizes to Use with the Removable Spring Terminal Blocks

mm / in. 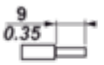				
mm²	0,08…2,5	0,25…2,5	0,25…1,5	2 x 0,25...2 x 0,75
AWG	28…14	24…14	24…16	2 x 24…2 x 18

Electronic Module 2DI 100 ... 240 Vac 3 Wires

Wiring Diagram

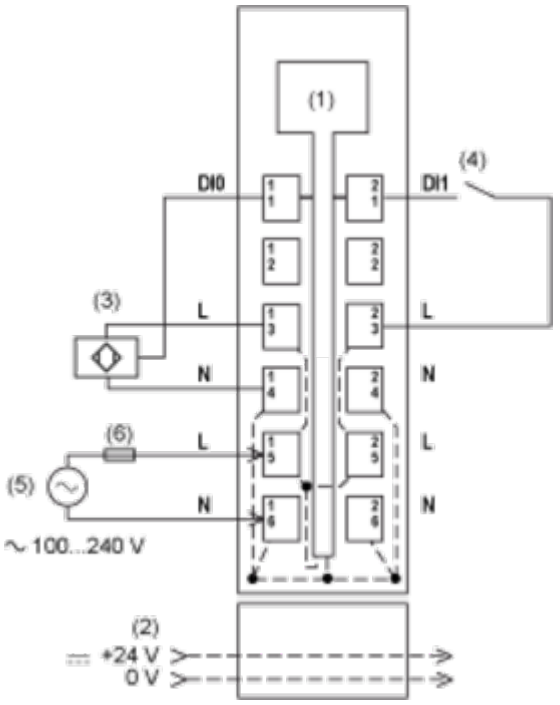

(1) Internal electronics
(2) 24 Vdc I/O power segment integrated into the bus bases
(3) 3-wire sensor
(4) 2-wire sensor
(5) External power supply: 100...240 Vac
(6) External fuse type T slow-blow 1 A 250 V