Product datasheet

Specifications

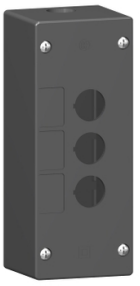

empty control station-severe environments-black-3 cut-outs-3 vertical openings

XALG03

Main

Range Of Product	Harmony XALG
Product Or Component Type	Empty control station
Device Short Name	XALG
Product Destination	For XB5 Ø 22 mm control and signalling units
Environmental Characteristic	Severe ambiance
Colour Of Base Of Enclosure	Black (RAL 9005)
Colour Of Cover	Black (RAL 9005)
Material	Mineral reinforced polyamide
Cable Entry	2 knock-outs for ISO M20 cable entry
Ip Degree Of Protection	IP66 conforming to IEC 60529 IP67 conforming to IEC 60529 IP69 IP69K

Complementary

Assembly Style	For customer assembly
Number Of Cut-Out	3 cut-outs 30 mm
Cad Overall Width	180 mm
Cad Overall Height	72 mm
Cad Overall Depth	65 mm
Net Weight	0.333 kg
Resistance To High Pressure Washer	10 mPa at 80 °C, distance : 0.2 m

Environment

Protective Treatment	TH TC
Ambient Air Temperature For Storage	-40…70 °C
Ambient Air Temperature For Operation	-25…70 °C
Electrical Shock Protection Class	Class II conforming to EN/IEC 61140
Ik Degree Of Protection	IK05 conforming to EN 50102

Disclaimer: This documentation is not intended as a substitute for and is not to be used for determining suitability or reliability of these products for specific user applications

Resistance To Chemical Agents	Good resistance to lactic acid at 10 °C Good resistant to detergent at 60 °C Not resistant to formic acid (10 %) at 50 °C Not resistant to lactic acid at 90 °C Good resistance to ammonia Good resistance to benzene Good resistance to butter Good resistance to citric acid (10 %) Good resistance to cutting compounds Good resistance to ethane Good resistance to ethanol Good resistance to ethylene Good resistance to fatty acids Good resistance to fatty alcohols Good resistance to milk Good resistance to motor oils and greases Good resistance to oils (vegetable, mineral) Good resistance to petroleum Good resistant to acetone Good resistant to uric acid (20 %) Limited resistance to acetic acid (10 %) Limited resistance to boric acid Not resistant to hydrogen peroxide (30 %) Not resistant to nitric acid (2 %)
Standards	EN/IEC 60947-1 EN/IEC 60947-5-1

Packing Units

Unit Type Of Package 1	PCE
Number Of Units In Package 1	1
Package 1 Height	8.0 cm
Package 1 Width	10.0 cm
Package 1 Length	18.7 cm
Package 1 Weight	321.0 g
Unit Type Of Package 2	S03
Number Of Units In Package 2	16
Package 2 Height	30.0 cm
Package 2 Width	30.0 cm
Package 2 Length	40.0 cm
Package 2 Weight	5.64 kg

Contractual warranty

Warranty	18 months

Sustainability

Green Premium™ label is Schneider Electric's commitment to delivering products with best-in-class environmental performance. Green Premium promises compliance with the latest regulations, transparency on environmental impacts, as well as circular and low-CO_2 products.

Guide to assessing product sustainability is a white paper that clarifies global eco-label standards and how to interpret environmental declarations.

Learn more about Green Premium >

Guide to assess a product's sustainability >

Transparency RoHS/REACh

Well-being performance

Reach Free Of Svhc	
Toxic Heavy Metal Free	
Mercury Free	
Rohs Exemption Information	Yes

Certifications & Standards

Reach Regulation	REACh Declaration
Eu Rohs Directive	Pro-active compliance (Product out of EU RoHS legal scope) EU RoHS Declaration
China Rohs Regulation	China RoHS declaration
Environmental Disclosure	Product Environmental Profile
Circularity Profile	End of Life Information

Dimensions Drawings

Dimensions

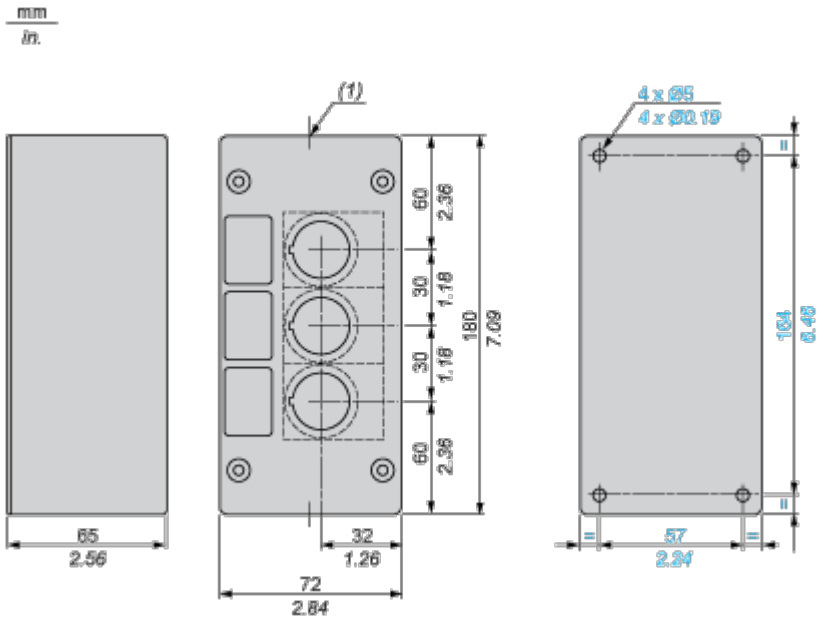

(1) 2 ISO 20 cable entries.