Product datasheet

Specifications

Green Premium™

84mm Rotating Mirror Blue 24VAC-DC

XVR08B06

To be discontinued on: 15-Aug-2024

Discontinued

Main

Range Of Product	Harmony XVR
Product Or Component Type	Prewired rotating mirror beacon
Sound Signalling	Without
Device Short Name	XVR
Mounting Diameter	84 mm
Ip Degree Of Protection	IP65 (with accessory) conforming to IEC 60529 IP23 conforming to IEC 60529
[Us] Rated Supply Voltage	24 V AC/DC
Light Source	High luminosity LED, blue

Complementary

Material	ABS (acrylonitrile butadiene-styrene): body part PC: globe
Cad Overall Width	84 mm
Cad Overall Depth	84 mm
Net Weight	0.3 kg
Marking	CE
Product Mounting	By 3 M4 screws
Supply Voltage Limits	19…30 V DC 21.6…26.4 V AC
[Uimp] Rated Impulse Withstand Voltage	0.8 kV
Current Consumption	125 mA
Flashing Frequency	2.3 Hz
Clamping Connection Capacity	0.83 mm²
Awg Gauge	AWG 18
Cable Length	500 mm

Environment

Standards	IEC 61000-6-2 IEC 61000-6-4
Product Certifications	UL
Protective Treatment	TC

Disclaimer: This documentation is not intended as a substitute for and is not to be used for determining suitability or reliability of these products for specific user applications

Ambient Air Temperature For Storage	-35…70 °C
Ambient Air Temperature For Operation	-10…50 °C
Electrical Shock Protection Class	Class II conforming to IEC 61140

Packing Units

Unit Type Of Package 1	PCE
Number Of Units In Package 1	1
Package 1 Height	18.500 cm
Package 1 Width	9.500 cm
Package 1 Length	9.500 cm
Package 1 Weight	390.000 g
Unit Type Of Package 2	S03
Number Of Units In Package 2	6
Package 2 Height	30.000 cm
Package 2 Width	30.000 cm
Package 2 Length	40.000 cm
Package 2 Weight	3.017 kg

Contractual warranty

Warranty	18 months

Sustainability

Green Premium™ label is Schneider Electric's commitment to delivering products with best-in-class environmental performance. Green Premium promises compliance with the latest regulations, transparency on environmental impacts, as well as circular and low-CO_2 products.

Guide to assessing product sustainability is a white paper that clarifies global eco-label standards and how to interpret environmental declarations.

Learn more about Green Premium >

Guide to assess a product's sustainability >

Transparency RoHS/REACh

Well-being performance

Rohs Exemption Information	Yes

Certifications & Standards

Reach Regulation	REACh Declaration
Eu Rohs Directive	Pro-active compliance (Product out of EU RoHS legal scope)
China Rohs Regulation	China RoHS declaration
Environmental Disclosure	Product Environmental Profile
Weee	The product must be disposed on European Union markets following specific waste collection and never end up in rubbish bins
Circularity Profile	End of Life Information

Dimensions Drawings

Rotating Mirror Beacon

Dimensions

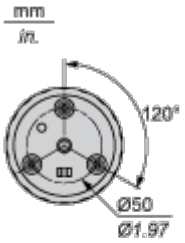

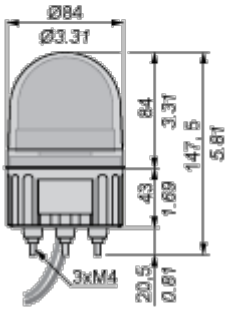

Mounting and Clearance

Rotating Mirror Beacon
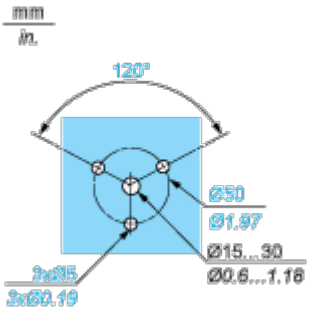
Panel Cut-out