Product datasheet

Specifications

Green Premium™

Illuminated beacon without buzzer, blue, Ø100, integral LED, 12...24 V DC

XVR3B06

Discontinued

Main

Range Of Product	Harmony XVR
Product Or Component Type	Beacon
Device Short Name	XVR3
Beacon Or Indicator Bank Unit Type	LED unit
Mounting Diameter	100 mm
Light Source	LED, blue
Device Application	Forklift Bulldozer Automated guided vehicle (AGV)

Complementary

Signalling Type	Flashing Blinking Rotating
Assembly Style	Ready assembled
Material	PC (polycarbonate): lenses PBT (polybutylene terephthalate) + PC (polycarbonate): body EPDM (ethylene propylene diene monomer): base
[Us] Rated Supply Voltage	12...24 V DC
[Ue] Rated Operational Voltage	10...30 V DC
Inrush Current	3 A
Power Consumption In W	2.8 W
Marking	CE
Installation Direction	Upright indoor Sideways indoor Inverted indoor Upright outdoor
Electrical Insulation Class	Class II
Current Consumption	3000 mA
Length	100 mm
Width	100 mm
Height	139 mm
Net Weight	0.484 kg

Environment

Disclaimer: This documentation is not intended as a substitute for and is not to be used for determining suitability or reliability of these products for specific user applications

Ambient Air Temperature For Operation	-20…50 °C
Ambient Air Temperature For Storage	-35…70 °C
Relative Humidity	35…85 % without condensation
Vibration Resistance	4.6 gn (sideways) 4.6 gn (inverted) 7.1 gn (upright)
Ip Degree Of Protection	IP65 (upright) IP23 (sideways) IP23 (inverted)

Packing Units

Unit Type Of Package 1	PCE
Number Of Units In Package 1	1
Package 1 Height	18.5 cm
Package 1 Width	14.3 cm
Package 1 Length	13.8 cm
Package 1 Weight	3.68 kg
Unit Type Of Package 2	S04
Number Of Units In Package 2	8
Package 2 Height	30.0 cm
Package 2 Width	40.0 cm
Package 2 Length	60.0 cm
Package 2 Weight	29.44 kg

Sustainability

Green Premium™ label is Schneider Electric's commitment to delivering products with best-in-class environmental performance. Green Premium promises compliance with the latest regulations, transparency on environmental impacts, as well as circular and low-CO_2 products.

Guide to assessing product sustainability is a white paper that clarifies global eco-label standards and how to interpret environmental declarations.

Learn more about Green Premium >

Guide to assess a product's sustainability >

Transparency RoHS/REACh

Well-being performance

Toxic Heavy Metal Free	
Mercury Free	
Rohs Exemption Information	Yes

Certifications & Standards

Reach Regulation	REACh Declaration
Eu Rohs Directive	Pro-active compliance (Product out of EU RoHS legal scope) EU RoHS Declaration
China Rohs Regulation	China RoHS declaration
Environmental Disclosure	Product Environmental Profile
Circularity Profile	End of Life Information

Dimensions Drawings

Dimensions

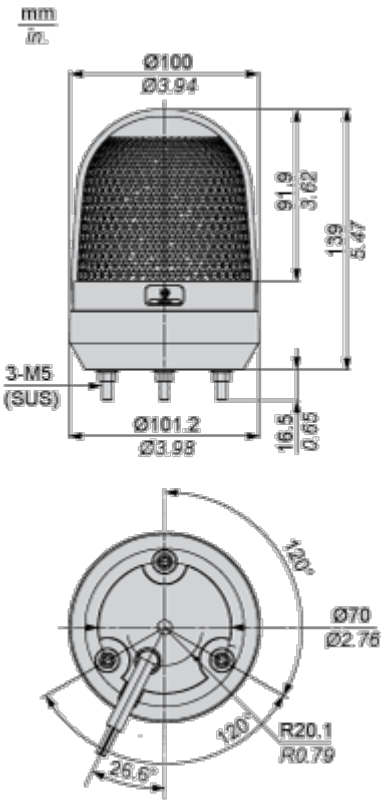

Mounting and Clearance

Panel Cut-out

Straight wiring

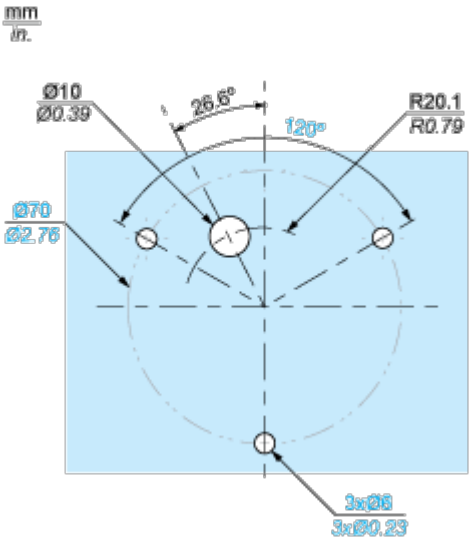

Side wiring

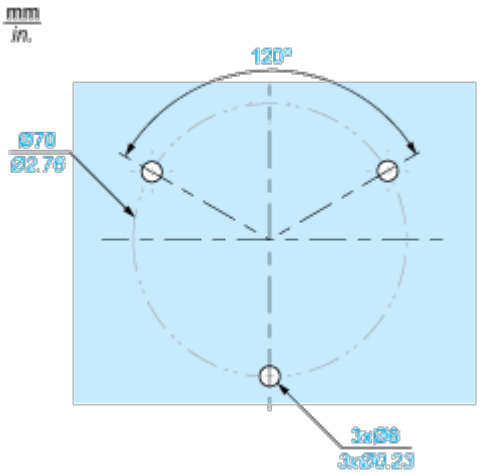

Connections and Schema

Wiring Diagram

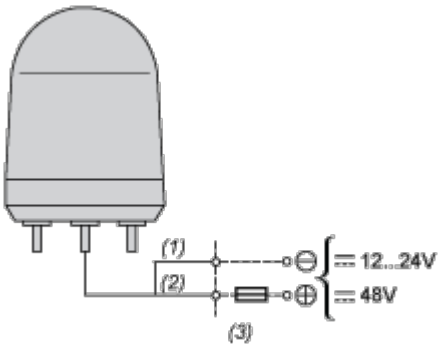

(1) Black

(2) White

(3) Fuse(Rated Current>2A)